ACCESSIBILITY PROFESSIONALS
www.FreedomShowers.com
1-877-947-7769

Description:

# APCSSB2-180150-PT
# 18" x 15" BENCH SEAT with Swing Down Leg

Accessibility Professionals

Customer Part #

10-01-2011

## BENCH SEAT
## MODEL # APCSSB2-180150-PT
## with Swing Down Leg
## (with Teak Phenolic Slats)

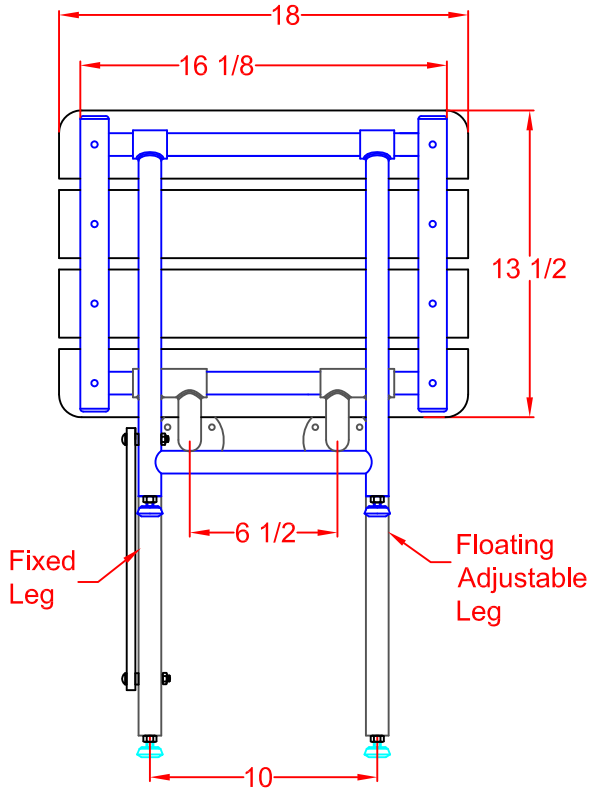


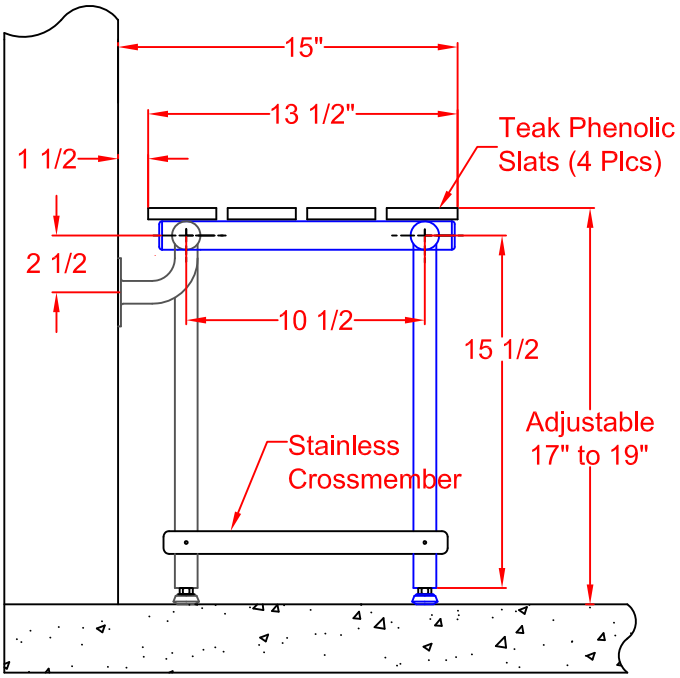


OPERATION:
Seat is automatically held in a raised position by a stainless cross member attached to the front and rear support legs. When the seat is lowered into its down position the Swing Down Leg automatically aligns the front and rear support legs with the help of the stainless cross member.

ARCHITECTURAL SPECIFICATIONS:
Frame: Type 304 (18-8) S.S. tube, 1-1/4" (32mm) x 18ga. (1.2mm) sq. main frame with 1" (25mm) x 18ga. (1.2mm) rd. cross members. Leg: "H" - shaped yoke of type 304 (18-8) S.S. tubing, 1" (25mm) x 18ga. (1.2mm) rd. tubing, Heliarc welded to 1-1/4" (32mm) rd. x 12ga.(2.7mm) frame hinge
The Swing Down Legs automatically level when the seat is lowered to a horizontal sitting position. The seat automatically locks itself when swung into its "up" position with the use of the stainless cross member.

MATERIALS:
FRAME: Type 304 (18-8) S.S. tubing, 1-1/4" (32mm) x 18ga. (1.2mm) sq. main frame with 1" (25mm) x 18ga. (1.2mm) rd. cross-members.

WALL FLANGES (2): Type 304 (18-8) S.S., 10ga. (3.4 mm) x 3" (76mm) dia. heliarc welded to 1" (25mm) rd. x 18ga. (1.2mm) 90 degree leg supports, and to 1-1/4" (32mm) rd. x 12ga. (2.7mm) frame hinge couplings. Three mounting holes in each flange.

SWING DOWN LEG: "H" shaped yoke of type 304 (18-8) S.S. 1" Dia. (25mm) x 18ga. (1.2mm) rd. tubing, heliarc welded to 1-1/4" (32mm) rd. x 12ga. (2.7mm) frame hinge couplings.

SEAT CHOICES:(Designate when ordering)

NW or NA - White (NW) or Almond (NA) Naugahyde covering 2" (51mm) foam mounted on 1/2" (13mm) marine plywood.

PW or PT - White (PW) or Teak (PT) Finish Phenolic 1/2" (13mm) x 3" (76mm) slats bolted to frame with S.S. screws.

HW - White High Density Polyethelene (HDPE) 1/2" (13mm) thick, bolted to frame with S.S. screws.

INSTALLATION:
All Shower Seats must only be installed using suitable fasteners and sufficient in-wall backing materials. ADA mounting height for lowered seat is 17" (432mm) to 19" (482mm).